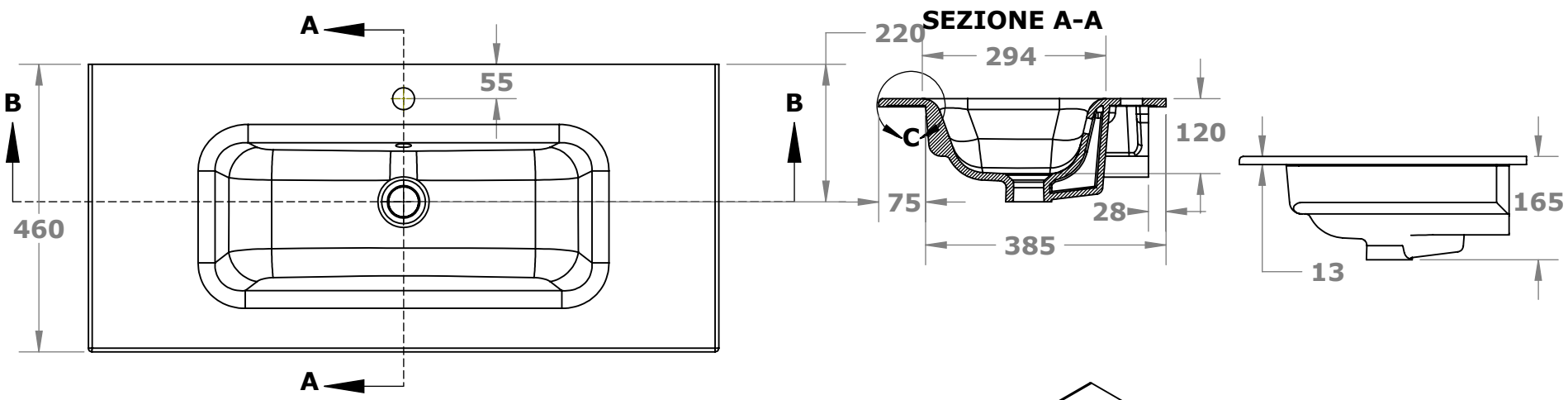

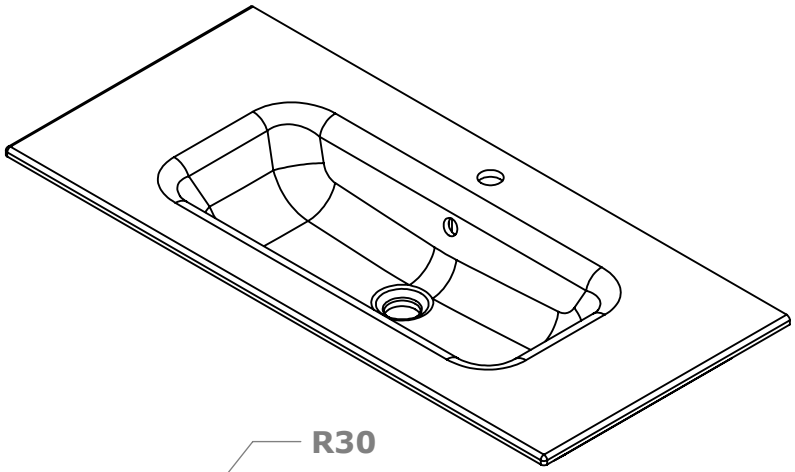

SEZIONE B-B

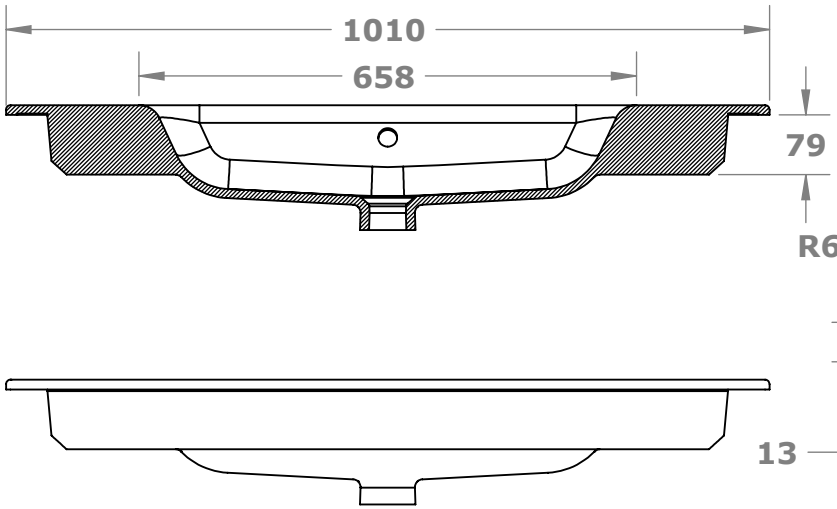

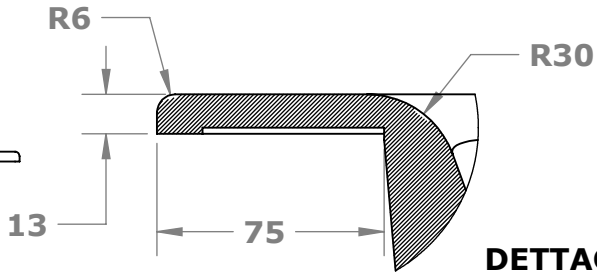

DETTAGLIO C
SCALA 4 : 10

PROPRIETARY AND CONFIDENTIAL
THE INFORMATION CONTAINED IN THIS DRAWING IS THE SOLE PROPERTY OF <INSERT COMPANY NAME HERE>. ANY REPRODUCTION IN PART OR AS A WHOLE WITHOUT THE WRITTEN PERMISSION OF <INSERT COMPANY NAME HERE> IS PROHIBITED.

UFFICIO TECNICO	DATA	DISEGNO CERAMICA S.R.L.
F.ABBALLE	**16-09-2022**	ART. **NO10146001 LAVABO 101X46 NORDIC**