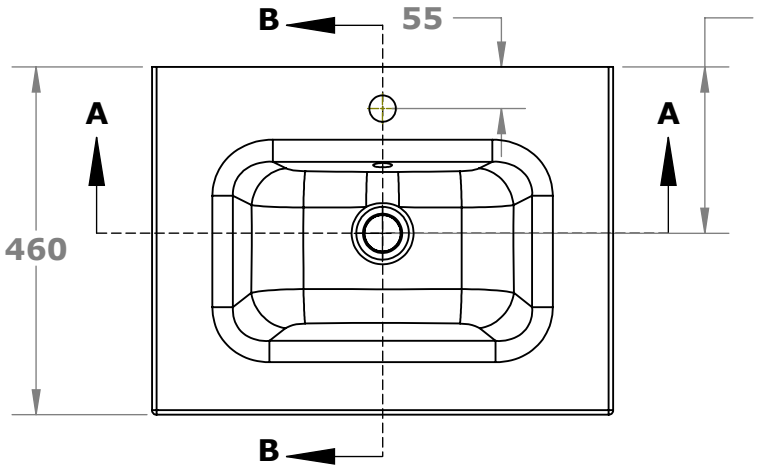

SEZIONE B-B

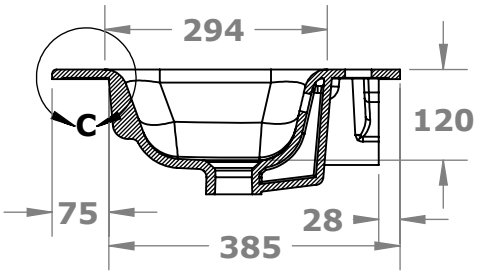

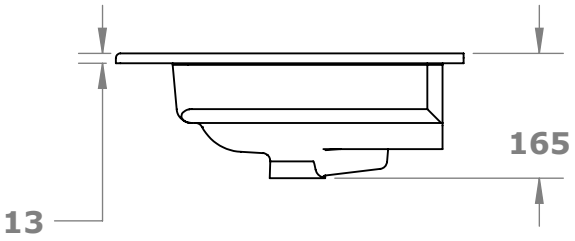

SEZIONE A-A

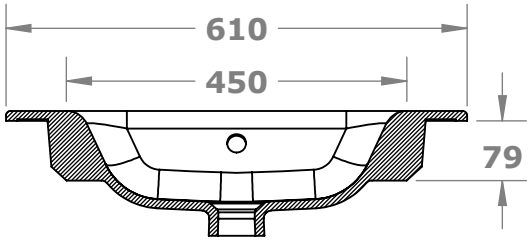

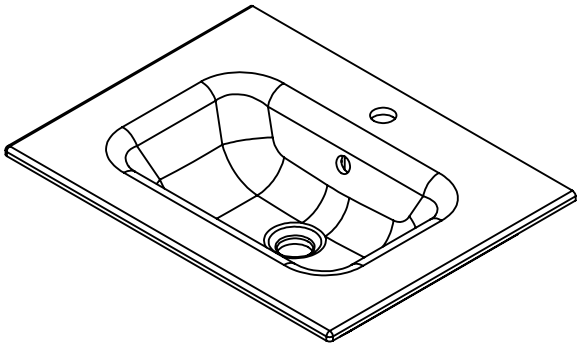

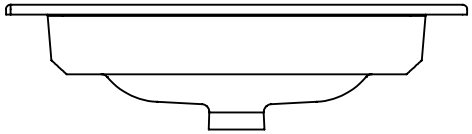

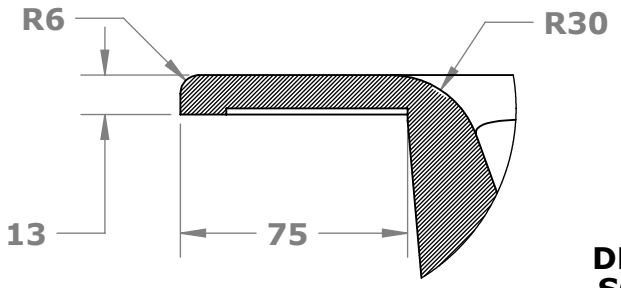

DETTAGLIO C
SCALA 4 : 10

PROPRIETARY AND CONFIDENTIAL
THE INFORMATION CONTAINED IN THIS DRAWING IS THE SOLE PROPERTY OF <INSERT COMPANY NAME HERE>. ANY REPRODUCTION IN PART OR AS A WHOLE WITHOUT THE WRITTEN PERMISSION OF <INSERT COMPANY NAME HERE> IS PROHIBITED.

UFFICIO TECNICO **F.ABBALLE**	DATA **16-09-2022**	DISEGNO CERAMICA S.R.L.
		ART. **NO06146001** **LAVABO 61X46 NORDIC**