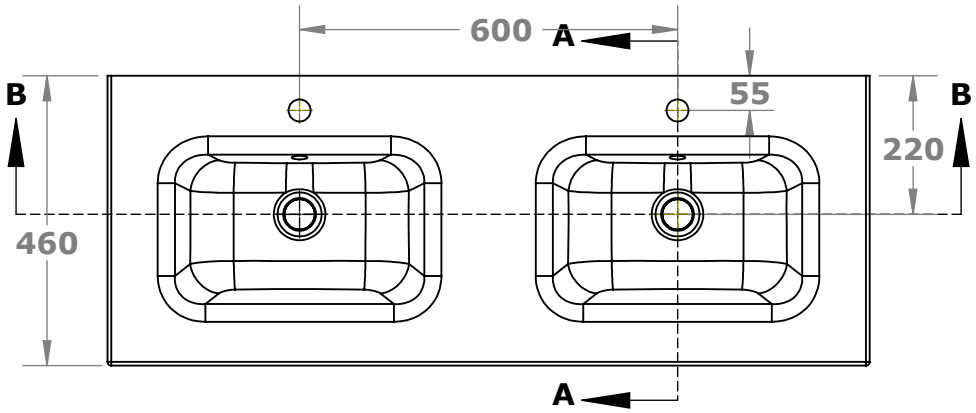

SEZIONE A-A
SCALA 1 : 12

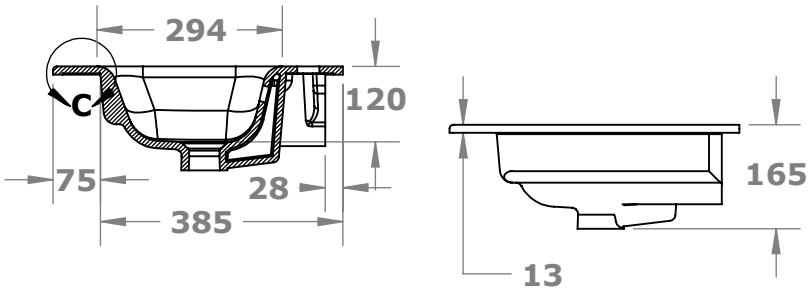

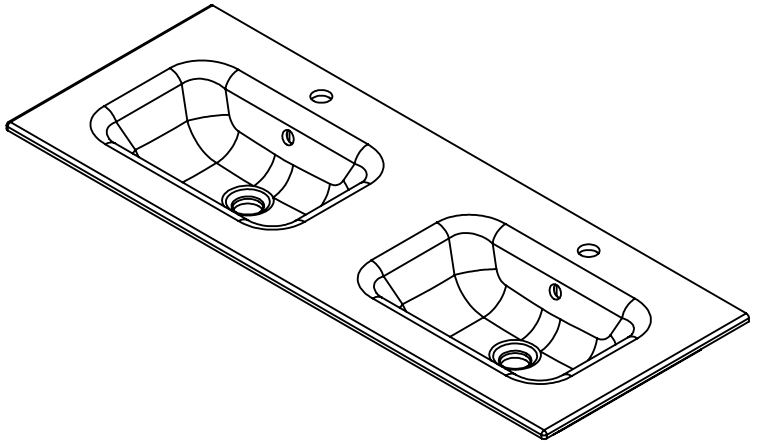

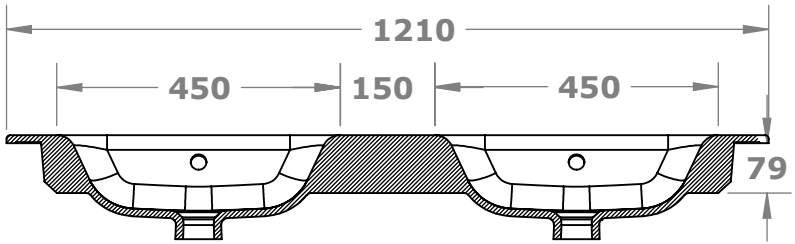

SEZIONE B-B
SCALA 1 : 12



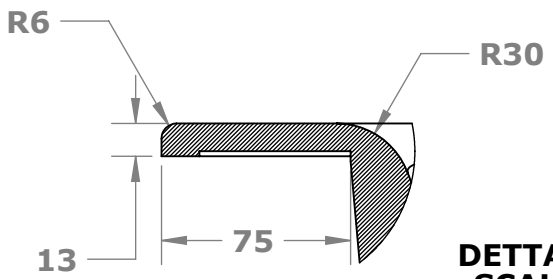

DETTAGLIO C
SCALA 1 : 3

PROPRIETARY AND CONFIDENTIAL
THE INFORMATION CONTAINED IN THIS DRAWING IS THE SOLE PROPERTY OF <INSERT COMPANY NAME HERE>. ANY REPRODUCTION IN PART OR AS A WHOLE WITHOUT THE WRITTEN PERMISSION OF <INSERT COMPANY NAME HERE> IS PROHIBITED.

UFFICIO TECNICO F.ABBALLE	DATA	DISEGNO CERAMICA S.R.L.
	16-09-2022	ART. **NO12D46001 LAVABO 121X46 2 VASCHE NORDIC**