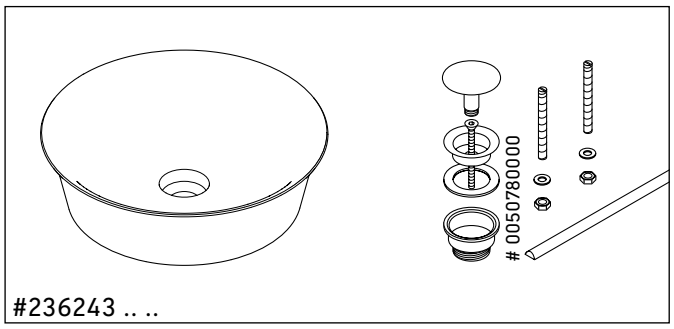

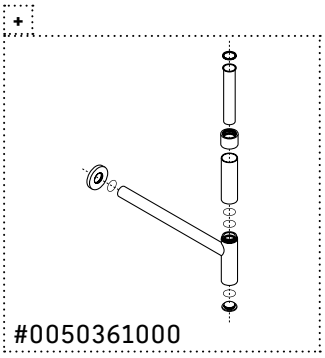

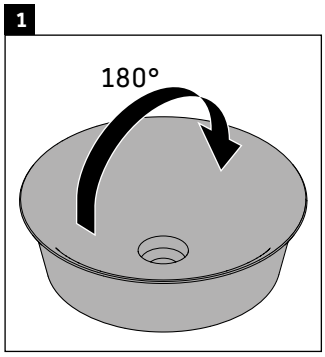

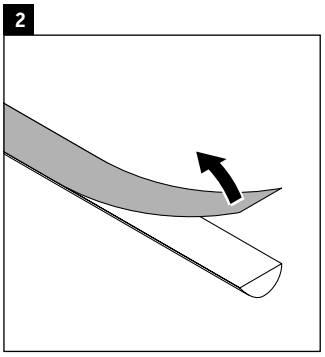

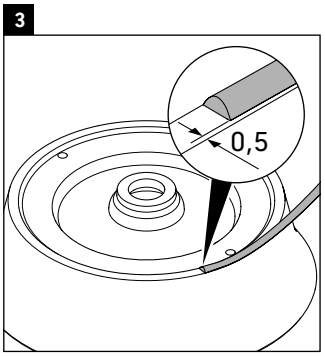

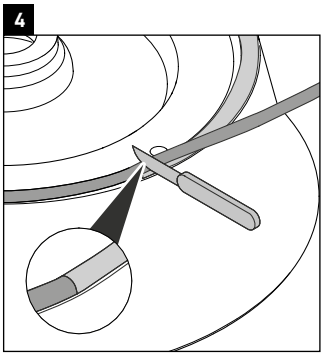

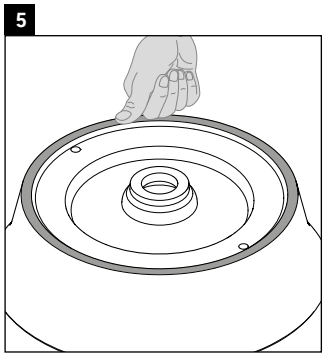

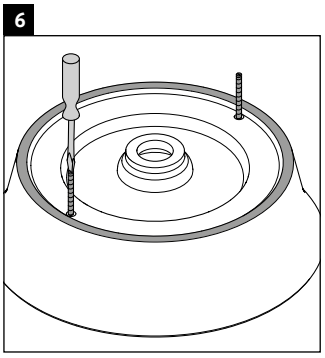

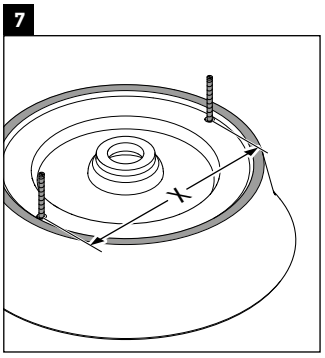

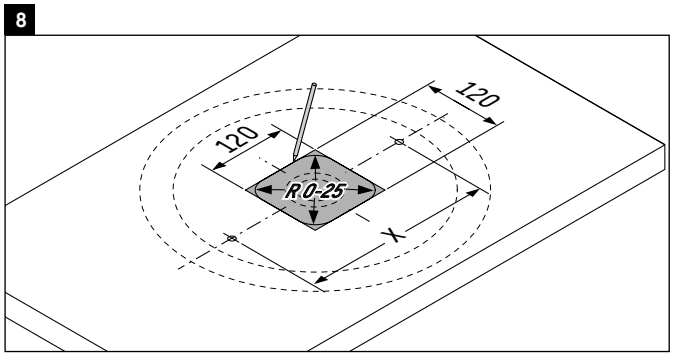

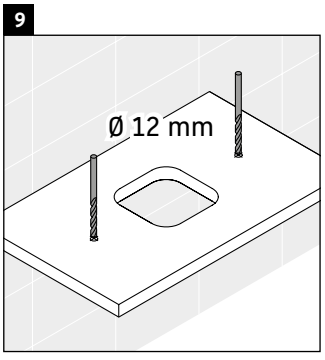

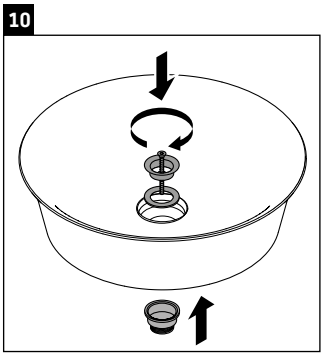

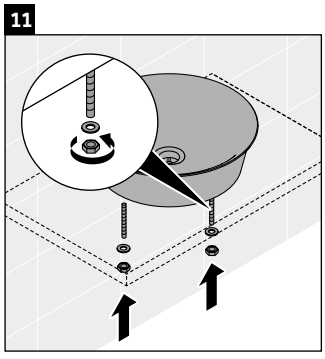

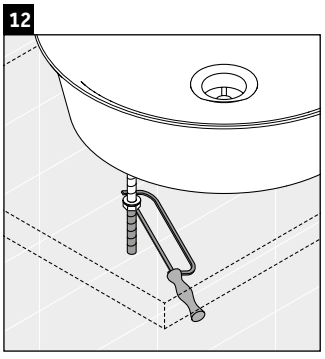

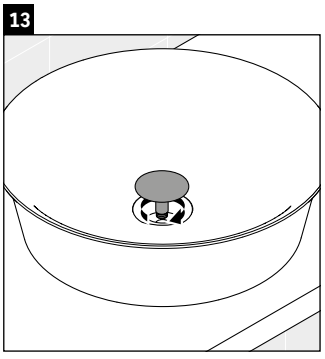

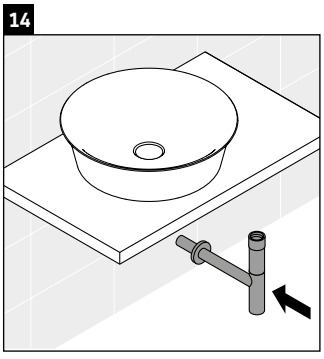

DURAVIT AG, Werderstr. 36, 78132 Hornberg, Germany, Phone +49 78 33 700, Fax +49 78 33 70 289, info@duravit.de, www.duravit.de

57398
Best.-Nr. 70300079/20.071 We reserve the right to make technical improvements and enhance the appearance of the products shown.