SEZIONE B-B

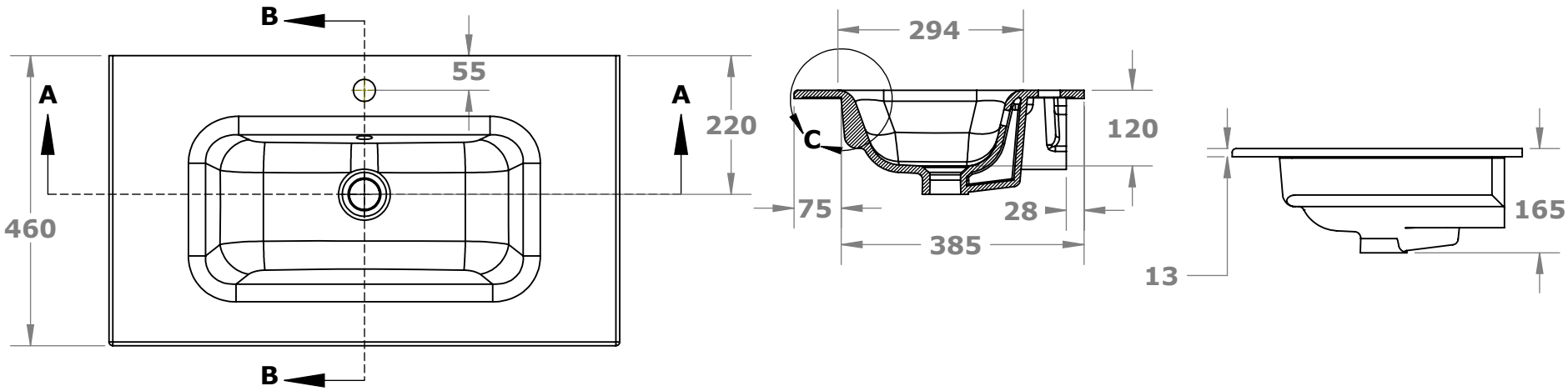

SEZIONE A-A

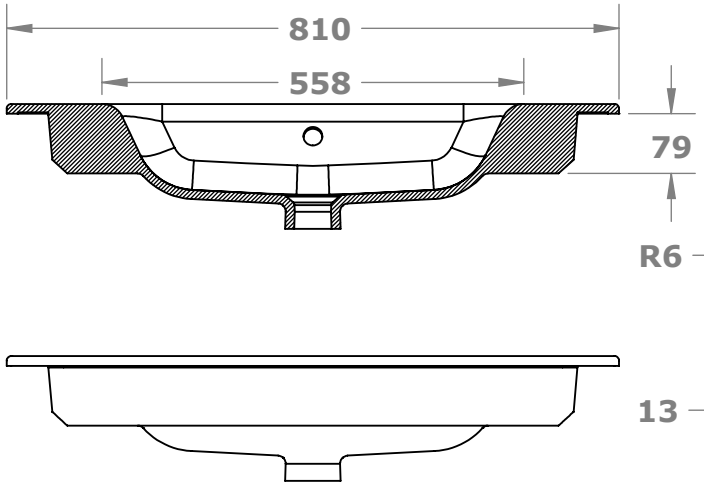

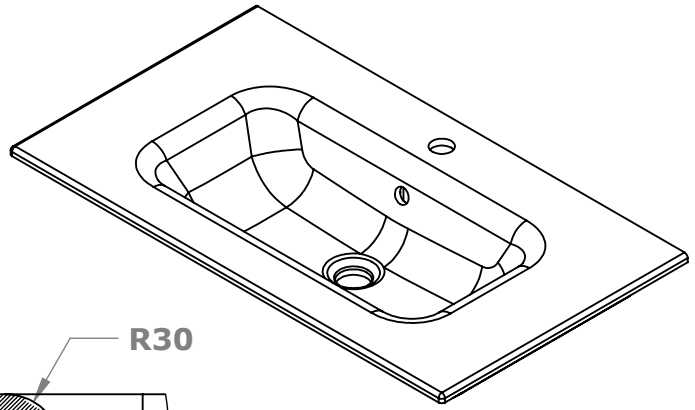

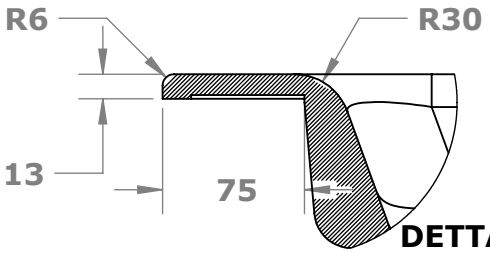

DETTAGLIO C
SCALA 1 : 4

PROPRIETARY AND CONFIDENTIAL
THE INFORMATION CONTAINED IN THIS DRAWING IS THE SOLE PROPERTY OF <INSERT COMPANY NAME HERE>. ANY REPRODUCTION IN PART OR AS A WHOLE WITHOUT THE WRITTEN PERMISSION OF <INSERT COMPANY NAME HERE> IS PROHIBITED.

UFFICIO TECNICO	DATA	DISEGNO CERAMICA S.R.L.
F.ABBALLE	**16-09-2022**	**ART.** **NO08146001** **LAVABO 81X46 NORDIC**